RITTER MAX

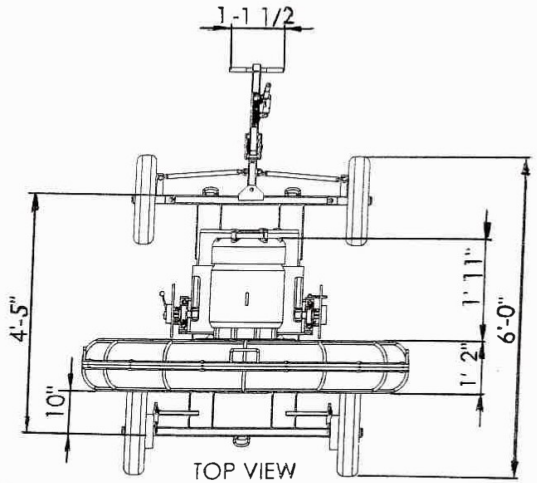

TOP VIEW

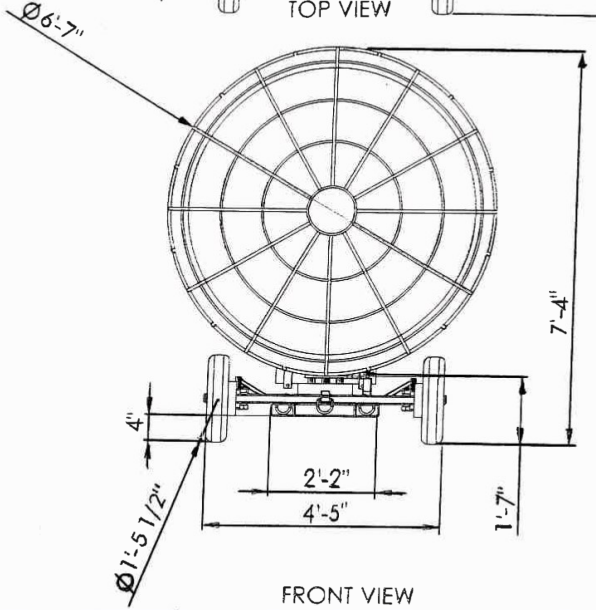

FRONT VIEW

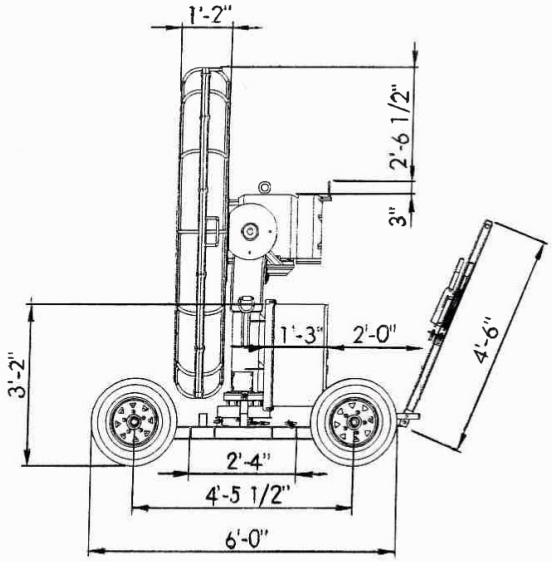

FRONT VIEW

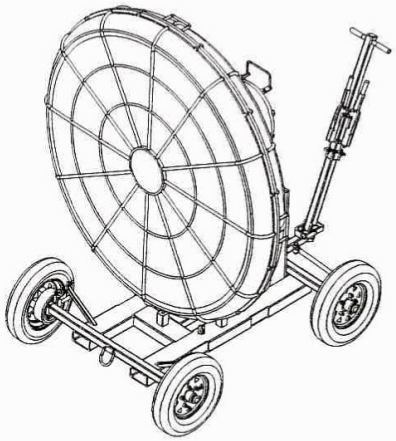

ISOMETRIC VIEW

RITTER MAX	
GROSS WEIGHT:	1500 LBS.
VOLTAGE:	220V POWER SOURCE
AMPERAGE:	80 AMPS PER LEG
PHASE:	3 PHASE W/CAMLOCK
HP:	30 HP. A/C MOTOR
REQUIREMENTS:	REQUIRES A QUALIFIED OPERATOR & MUST BE TIE DOWN VIA RATCHET STRAPS.(NOT PROVIDED) NOTE: SOME MODELS ARE REMOTE CONTROL COMPATIBLE.

J.E.M. F/X Inc.

SPECIAL EFFECTS DESIGN & FABRICATION

28255 Kelly Johnson parkway Valencia CA 91355
(661) 702-1022 OFFICE

THIS DOCUMENT CONTAINS COPY RIGHTED MATERIAL AND CONFIDENTIAL TRADE SECRET INFORMATION BELONG EXCLUSIVELY TO JEM F/X INC. USE DISCLOSURE DISSEMINATION OR DUPLICATION OF ANY OF THE INFORMATION CONTAINED HEREIN MAY RESULT IN LIABILITY UNDER APPLICABLE LAW
The data in this document incorporates property rights of EL-A P. PORCY. Any party accepting this document does so in confidence and agrees that it should not be duplicated in a whole or in part nor disclosed to others

RITTER MAX

DRAWN BY	SIZE	DATE	DRAWING NO	REV
H GARCIA	D	04/11/19	RITTER MAX 001	N/A

DESIGNED BY	SCALE	FILE NO	SHEET
JEM F/X	NS		OF